Work Order ID 71665

Thursday, July 07, 2011 12:09:11 PM

Item ID: D3462-1
Revision ID:
Item Name: BRACKET ASSEMBLY
Start Date: 7/7/2011 **Start Qty:** 6.00
Required Date: 7/21/2011 **Req'd Qty:** 6.00
Reference:

Accept

Setup **Start**
Stop

Cust Item ID:
Customer:

Run **Start**
Stop

Approvals: **Process Plan:** CL **Date:** 11/07/0) **Tooling:** _____ **Date:** _____
QC: _____ **Date:** _____ **SPC (Y/N):** _____ **Date:** _____

Draw Nbr	Revision Nbr
D3462	Rev C

Sequence ID/ Work Center ID	Operation Description	Set Up/ Run Hours	Tool ID	Tool #	Plan Code	Accept Qty	Reject Qty	Reject Number	Insp. Stamp
100	FLOW WATER JET	0.00							
Waterjet	**Memo**	0.00				B11-8-4			
FLOW CNC Waterjet 304 .125	1-Cut as per Dwg D3462 ☐Dwg Rev: C ☐Prog Rev: C ☐2- Deburr if necessary								
110	QC2- Inspect parts off machine FAI/FAIB	0.00							
QC	**Memo**	0.00				B11-8-4			
Quality Control									
120	QC8- Inspect parts - second check	0.00							
QC	**Memo**	0.00				416			
Quality Control									

8 n/08/04

Dart Aerospace Ltd

W/O:		WORK ORDER CHANGES					
DATE	STEP	PROCEDURE CHANGE	By	Date	Qty	Approval Chief Eng / Prod Mgr	Approval QC Inspector

Part No: _____ **PAR #:** _____ **Fault Category:** _____ **NCR:** Yes No **DQA:** _____ **Date:** _____

Resolution: _____ **Disposition:** _____ **QA: N/C Closed:** _____ **Date:** _____

NCR:		WORK ORDER NON-CONFORMANCE (NCR)						
DATE	STEP	Description of NC Section A	Corrective Action Section B			Verification Section C	Approval Chief Eng	Approval QC Inspector
			Initial Chief Eng	Action Description Chief Eng	Sign & Date			

NOTE: Date & initial all entries

Work Order ID 71665

Thursday, July 07, 2011 12:09:11 PM

Item ID: D3462-1
Revision ID:
Item Name: BRACKET ASSEMBLY
Start Date: 7/7/2011 **Start Qty:** 6.00
Required Date: 7/21/2011 **Req'd Qty:** 6.00
Reference:

Accept

Setup **Start**
Stop

Cust Item ID:
Customer:

Run **Start**
Stop

Approvals: **Process Plan:** _____ **Date:** _____ **Tooling:** _____ **Date:** _____
QC: _____ **Date:** _____ **SPC (Y/N):** _____ **Date:** _____

Sequence ID/ Work Center ID	Operation Description	Set Up/ Run Hours	Tool ID	Tool #	Plan Code	Accept Qty	Reject Qty	Reject Number	Insp. Stamp
130	Small Fab	0.00							
Small Fab									
Small Fab	**Memo**	0.00							
	Deburr if necessary.								
140	QC5- Inspect part completeness to step on W/O	0.00							
QC	**Memo**	0.00							
Quality Control									
150	Identify as per dwg & Stock Location:	0.00							
Packaging	**Memo**	0.00							
Packaging	*****STOCK IN LARGE FAB*****								

Dart Aerospace Ltd

W/O:		WORK ORDER CHANGES					
DATE	STEP	PROCEDURE CHANGE	By	Date	Qty	Approval Chief Eng / Prod Mgr	Approval QC Inspector

Part No: _____ **PAR #:** _____ **Fault Category:** _____ **NCR:** Yes No **DQA:** _____ **Date:** _____

Resolution: _____ **Disposition:** _____ **QA: N/C Closed:** _____ **Date:** _____

NCR:		WORK ORDER NON-CONFORMANCE (NCR)						
DATE	STEP	Description of NC Section A	Corrective Action Section B			Verification Section C	Approval Chief Eng	Approval QC Inspector
			Initial Chief Eng	Action Description Chief Eng	Sign & Date			

NOTE: Date & initial all entries

Work Order ID 71665

Thursday, July 07, 2011 12:09:11 PM

Item ID: D3462-1 **Accept** **Setup Start**

Revision ID:

Item Name: BRACKET ASSEMBLY **Stop**

Start Date: 7/7/2011 **Start Qty:** 6.00 **Cust Item ID:**

Required Date: 7/21/2011 **Req'd Qty:** 6.00 **Customer:**

Reference:

Approvals: **Process Plan:** _____ **Date:** _____ **Tooling:** _____ **Date:** _____ **Run Start**

QC: _____ **Date:** _____ **SPC (Y/N):** _____ **Date:** _____ **Stop**

Sequence ID/ Work Center ID	Operation Description	Set Up/ Run Hours	Tool ID	Tool #	Plan Code	Accept Qty	Reject Qty	Reject Number	Insp. Stamp
160	QC21- Final Inspection - Work Order Release	0.00							
QC	Memo	0.00							
Quality Control									

ok 11/08/08

11-08-5

11

Dart Aerospace Ltd

W/O:		WORK ORDER CHANGES					
DATE	STEP	PROCEDURE CHANGE	By	Date	Qty	Approval Chief Eng / Prod Mgr	Approval QC Inspector

Part No: _____ **PAR #:** _____ **Fault Category:** _____ **NCR:** Yes No **DQA:** _____ **Date:** _____

Resolution: _____ **Disposition:** _____ **QA: N/C Closed:** _____ **Date:** _____

NCR:		WORK ORDER NON-CONFORMANCE (NCR)						
DATE	STEP	Description of NC Section A	Corrective Action Section B			Verification Section C	Approval Chief Eng	Approval QC Inspector
			Initial Chief Eng	Action Description Chief Eng	Sign & Date			

NOTE: Date & initial all entries

Picklist Print

Thursday, July 07, 2011 12:09:09 PM

Work Order ID: 71665

Parent Item: D3462-1

Parent Item Name: BRACKET ASSEMBLY

Start Date: 7/7/2011 **Required Date:** 7/21/2011

Start Qty: 6.00 **Required Qty:** 6.00

Comments: IPP REV. A 05.11.18 NEW ISSUE EC
IPP Rev:B Now on Waterjet 06-06-16 JLM
esr rev B 08.07.15 ecn 1049 EC verified by: DD

Component Item ID/ Item Name	Replacement Item ID	Mfg/ Purch	Bin Item	Primary Location	Last Location	Route Seq ID	Unit of Measure	Qty on Hand	Qty per Kit	Total Qty	Qty Issued	Date Issued	Status
M304S11GA 304/316 0.125 Sheet		Purchased	No			100	sf	102.0000	0.095	0.6			

FB 11-8-4

Location	Loc Qty	Loc Code
MAT020	102	
117494	102	

117494

(FB)

Dart Aerospace Ltd

W/O:		WORK ORDER CHANGES					
DATE	STEP	PROCEDURE CHANGE	By	Date	Qty	Approval Chief Eng / Prod Mgr	Approval QC Inspector

Part No: _____ **PAR #:** _____ **Fault Category:** _____ **NCR:** Yes No **DQA:** _____ **Date:** _____

Resolution: _____ **Disposition:** _____ **QA: N/C Closed:** _____ **Date:** _____

NCR:		WORK ORDER NON-CONFORMANCE (NCR)						
DATE	STEP	Description of NC Section A	Corrective Action Section B			Verification Section C	Approval Chief Eng	Approval QC Inspector
			Initial Chief Eng	Action Description Chief Eng	Sign & Date			

NOTE: Date & initial all entries

H:\fFORMS\Quality Assurance\approved QA\NCRWO RevE

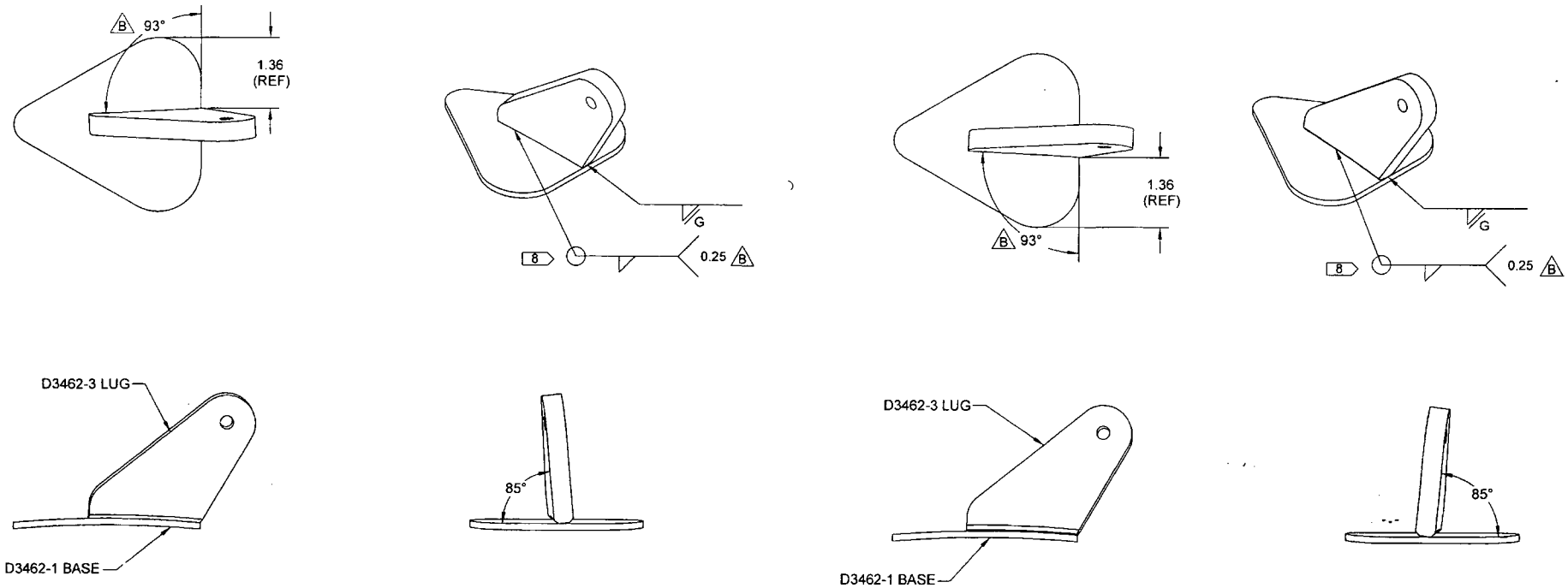

D3462-041 BRACKET ASSEMBLY

D3462-042 BRACKET ASSEMBLY

SHOP COPY
RETURN TO
ENGINEERING
UNCONTROLLED COPY
SUBJECT TO AMENDMENT
WITHOUT NOTICE
WORK ORDER
NO. 71665
C2 11/07/07

QTY -041	QTY -042	P/N	DESCRIPTION
X		D3462-041	BRACKET ASSEMBLY
	X	D3462-042	BRACKET ASSEMBLY
1	1	D3462-1	BASE
1	1	D3462-3	LUG

NOTES:
1) MATERIAL: N/A
2) FINISH: POWDER COAT WHITE (4.3.5.2) PER DART QSI 005 4.3
3) TOLERANCES: PER DART QSI 018 UNLESS OTHERWISE NOTED
4) UNITS: INCHES UNLESS OTHERWISE NOTED
5) BREAK SHARP EDGES: 0.005 TO 0.010 MAX
6) IDENTIFICATION: IDENTIFY WITH DART P/N "D3462-041" OR "D3462-042" USING FINE POINT PERMANENT INK MARKER
7) WEIGHT: 0.75 lbs (TYP)
8) WELDING: PER DART QSI 004

FILED 08.07.07

REV.	DESCRIPTION	BY	DATE
C	SHOW VIEWS OF D3462-041 & D3462-042, UPDATE DWG REASON: PRODUCTION FACILITY	DC	07.10.24
B	REVISE DIMENSIONS	RF	05.12.05
A	NEW ISSUE	RF	05.09.20

DESIGN	RF
DRAWN	DC
CHECKED	
MFG. APPR.	
APPROVED	
DE APPR.	
DATE	07.10.24

DART AEROSPACE LTD
HAWKESBURY, ONTARIO, CANADA

DRAWING NO. D3462 REV. C
SHEET 1 OF 2
TITLE BRACKET ASSEMBLY
SCALE 1:2

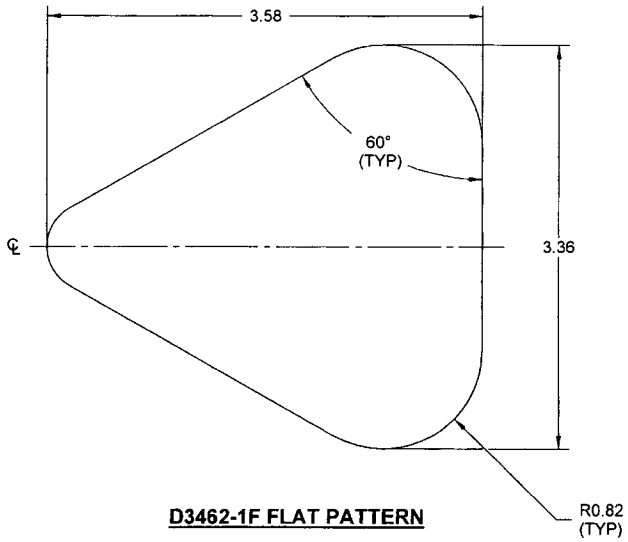

D3462-1F FLAT PATTERN

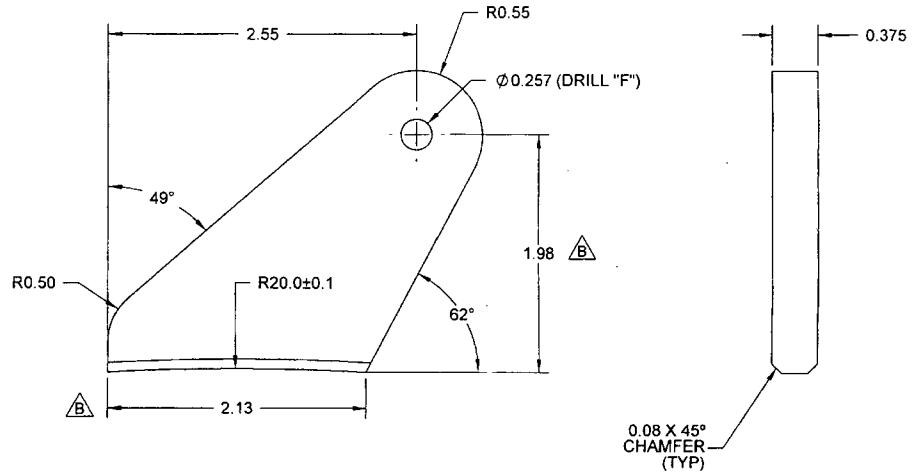

D3462-3 LUG

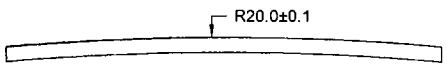

D3462-1 BEND DETAIL
(MAKE FROM D3462-1F)

SHOP COPY
RETURN TO
ENGINEERING
UNCONTROLLED COPY
SUBJECT TO AMENDMENT
WITHOUT NOTICE
WORK ORDER
NO. 71665

NOTES:
1) MATERIAL: AISI 304 SS BAR
(REF. DART SPEC M304B0.375X03.000)
2) FINISH: NONE
3) TOLERANCES: PER DART QSI 018 UNLESS OTHERWISE NOTED
4) UNITS: INCHES UNLESS OTHERWISE NOTED
5) BREAK SHARP EDGES: 0.005 TO 0.010 MAX
6) IDENTIFICATION: NONE
7) WEIGHT: 0.47 lbs

RELEASED
07.07

NOTES:
1) MATERIAL: AISI 304 SS SHEET, 0.125 THICK
PER MIL-S-5019 (ANNEALED), 2B FINISH
(REF. DART SPEC. M304S11GA)
2) FINISH: NONE
3) TOLERANCES: PER DART QSI 018 UNLESS OTHERWISE NOTED
4) UNITS: INCHES UNLESS OTHERWISE NOTED
5) BREAK SHARP EDGES: 0.005 TO 0.010 MAX
6) IDENTIFICATION: NONE
7) WEIGHT: 0.28 lbs

DESIGN		**DART AEROSPACE LTD** HAWKESBURY, ONTARIO, CANADA
DRAWN		
CHECKED		DRAWING NO. D3462 — REV. C — SHEET 2 OF 2
MFG. APPR.		
APPROVED		TITLE: BRACKET ASSEMBLY — SCALE 1:1
DE APPR.		
DATE	07.10.24	

D3065-5DART AEROSPACE LTD	Work Order:	71665
Description: Base	**Part Number:**	**D3462-1**
Inspection Dwg: D3462 **Rev:** C		**Page 1 of 1**

FIRST ARTICLE INSPECTION CHECKLIST

[X] **First Article** [ ] **Prototype**

Drawing Dimension	Tolerance	Actual Dimension	Accept	Reject	Method of Inspection	Comments
3.58	+/-0.030	3.585	X		V PB02	
3.36	+/-0.030	3.360	X		V	
0.125	+/-0.010	.119	X		V	

Measured by:	PB	Audited by:	D	Prototype Approval:	N/A
Date:	11-8-4	Date:	11/08/04	Date:	N/A

Rev	Date	Change	Revised by	Approved
A	07.09.06	New Issue	KJ/JLM	
B	08.07.24	Dimensions updated per Dwg Rev C	KJ/DD	